5.1 IMPEDANCE DIAGRAM

So far our discussion has been confined to resistive circuits. Resistance restricts the flow of current by opposing free electron movement. Each element has some resistance; for example, an inductor has some resistance; a capacitance also has some resistance. In the resistive element, there is no phase difference between the voltage and the current. In the case of pure inductance, the current lags behind the voltage by 90 degrees, whereas in the case of pure capacitance, the current leads the voltage by 90 degrees. Almost all electric circuits offer impedance to the flow of current. Impedance is a complex quantity having real and imaginary parts; where the real part is the resistance and the imaginary part is the reactance of the circuit.

Consider the *RL* series circuit shown in Fig. 5.1. If we apply the real function $V_m \cos \omega t$ to the circuit, the response may be $I_m \cos \omega t$. Similarly, if we apply the imaginary function $jV_m \sin \omega t$ to the same circuit, the response is $jI_m \sin \omega t$. If we apply a complex function, which is a combination of real and imaginary functions, we will get a complex response.

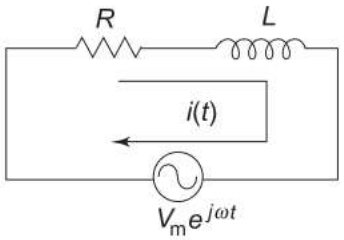

Fig. 5.1

This complex function is $V_m e^{j\omega t} = V_m (\cos \omega t + j \sin \omega t)$.
Applying Kirchhoff's law to the circuit shown in Fig. 5.1,

we get $$V_m e^{j\omega t} = Ri(t) + L \frac{di(t)}{dt}$$

The solution of this differential equation is

$$i(t) = I_m e^{j\omega t}$$

By substituting $i(t)$ in the above equation, we get

$$V_m\, e^{j\omega t} = R\, I_m\, e^{j\omega t} + L\, \frac{d}{dt}\, (I_m\, e^{j\omega t})$$

$$V_m\, e^{j\omega t} = R I_m\, e^{j\omega t} + L\, I_m\, j\omega\, e^{j\omega t}$$

$$V_m = (R + j\omega L)\, I_m$$

Impedance is defined as the ratio of the voltage to current function

$$Z = \frac{V_m\, e^{j\omega t}}{\dfrac{V_m}{R + j\omega L}\, e^{j\omega t}} = R + j\omega L$$

Complex impedance is the total opposition offered by the circuit elements to *ac* current, and can be displayed on the complex plane. The impedance is denoted by Z. Here the resistance R is the real part of the impedance, and the reactance X_L is the imaginary part of the impedance. The resistance R is located on the real axis. The inductive reactance X_L is located on the positive j axis. The resultant of R and X_L is called the complex impedance.

Figure 5.2 is called the impedance diagram for the *RL* circuit. From Fig. 5.2, the impedance $Z = \sqrt{R^2 + (\omega L)^2}$, and angle $\theta = \tan^{-1} \omega L/R$. Here, the impedance is the vector sum of the resistance and inductive reactance. The angle between impedance and resistance is the phase angle between the current and voltage applied to the circuit.

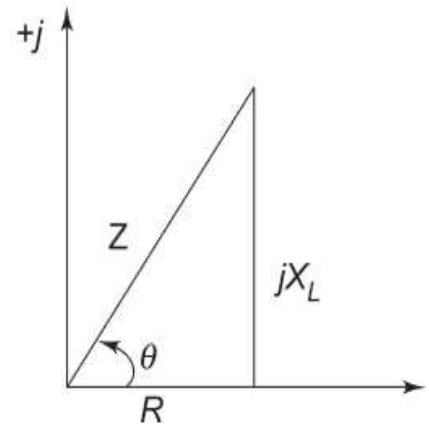

Fig. 5.2

Similarly, if we consider the RC series circuit, and apply the complex function $V_m e^{j\omega t}$ to the circuit in Fig. 5.3, we get a complex response as follows.

Applying Kirchhoff's law to the above circuit, we get

$$V_m e^{j\omega t} = Ri(t) + \frac{1}{C}\int i(t)\, dt$$

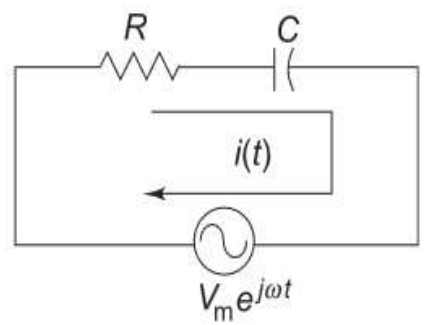

Fig. 5.3

Solving this equation we get,

$$i(t) = I_m \, e^{j\omega t}$$

$$V_m \, e^{j\omega t} = R \, I_m \, e^{j\omega t} + \frac{1}{C} I_m \left(\frac{+1}{j\omega} \right) e^{j\omega t}$$

$$= \left[RI_m - \frac{j}{\omega C} \, I_m \right] e^{j\omega t}$$

$$V_m = \left(R - \frac{j}{\omega C} \right) I_m$$

The impedance

$$Z = \frac{V_m e^{j\omega t}}{V_m / [R - j/\omega C] e^{j\omega t}}$$
$$= [R - (j/\omega C)]$$

Here impedance Z consists of resistance (R), which is the real part, and capacitive reactance ($X_C = 1/\omega C$), which is the imaginary part of the impedance. The resistance, R, is located on the real axis, and the capacitive reactance X_C is located on the negative j axis in the impedance diagram in Fig. 5.4.

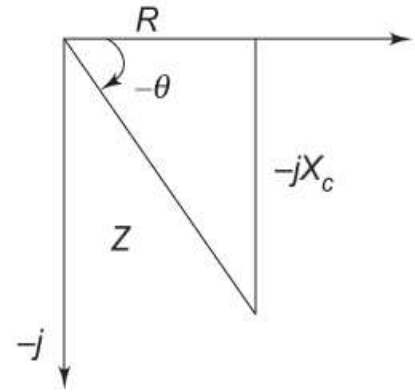

Fig. 5.4

Form Fig. 5.4, impedance $Z = \sqrt{R^2 + X_C^2}$ or $\sqrt{R^2 + (1/\omega C)^2}$ and angle $\theta = \tan^{-1}(1/\omega CR)$. Here, the impedance, Z, is the vector sum of resistance and capacitive reactance.The angle between resistance and impedance is the phase angle between the applied voltage and current in the circuit.

Series RL CIRCUIT

If we apply a sinusoidal input to an RL circuit, the current in the circuit and all voltages across the elements are sinusoidal. In the analysis of the RL series circuit, we can find the impedance, current, phase angle and voltage drops. In Fig. 5.10 (a) the resistor voltage (V_R) and current (I) are in phase with each other, but lag behind the source voltage (V_S). The inductor voltage (V_L) leads the source voltage (V_S). The phase angle between current and voltage in a pure inductor is always 90°. The amplitudes of voltages and currents in the circuit are completely dependent on the values of elements (i.e. the resistance and inductive reactance). In the circuit shown, the phase angle is somewhere between zero and 90° because of the series combination of resistance with inductive reactance, which depends on the relative values of R and X_L.

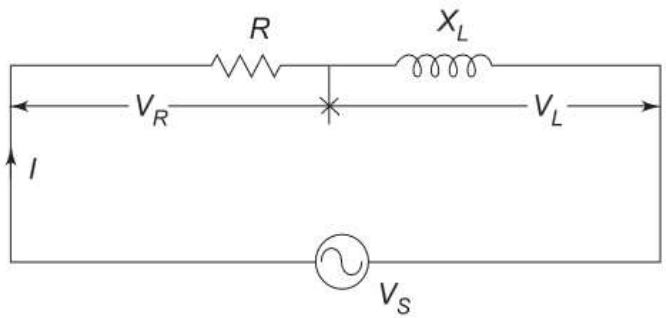

The phase relation between current and voltages in a series RL circuit is shown in Fig. 5.10(b).

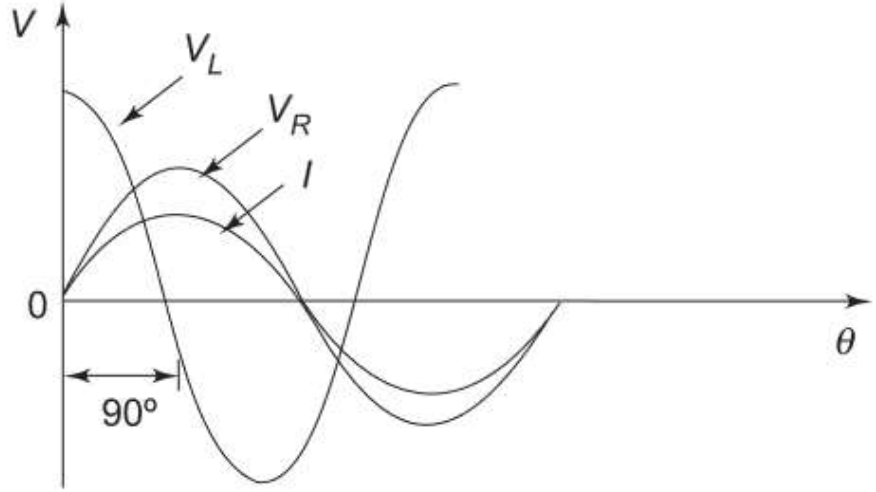

Fig. 5.10(b)

Here V_R and I are in phase. The amplitudes are arbitrarily chosen. From Kirchhoff's voltage law, the sum of the voltage drops must equal the applied voltage. Therefore, the source voltage V_S is the phasor sum of V_R and V_L.

$$\therefore \qquad V_S = \sqrt{V_R^2 + V_L^2}$$

The phase angle between resistor voltage and source voltage is

$$\theta = \tan^{-1} (V_L/V_R)$$

where θ is also the phase angle between the source voltage and the current. The phasor diagram for the series RL circuit that represents the waveforms in Fig. 5.10(c).

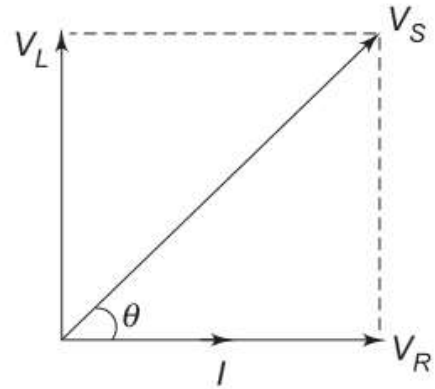

Fig. 5.10(c)

5.3.2 Series RC Circuit

When a sinusoidal voltage is applied to an RC series circuit, the current in the circuit and voltages across each of the elements are sinusoidal. The series RC circuit is shown in Fig. 5.13 (a).

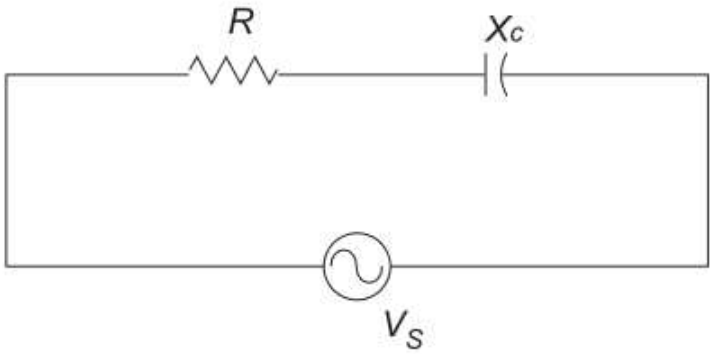

Fig. 5.13(a)

Here the resistor voltage and current are in phase with each other. The capacitor voltage lags behind the source voltage. The phase angle between the current and the capacitor voltage is always 90°. The amplitudes and the phase relations between the voltages and current depend on the ohmic values of the resistance and the capacitive reactance. The circuit is a series combination of both resistance and capacitance; and the phase angle between the applied voltage and the total current is somewhere between zero and 90°, depending on the relative values of the resistance and reactance. In a series RC circuit, the current is the same through the resistor and the capacitor. Thus, the resistor voltage is in phase with the current, and the capacitor voltage lags behind the current by 90° as shown in Fig. 5.13(b).

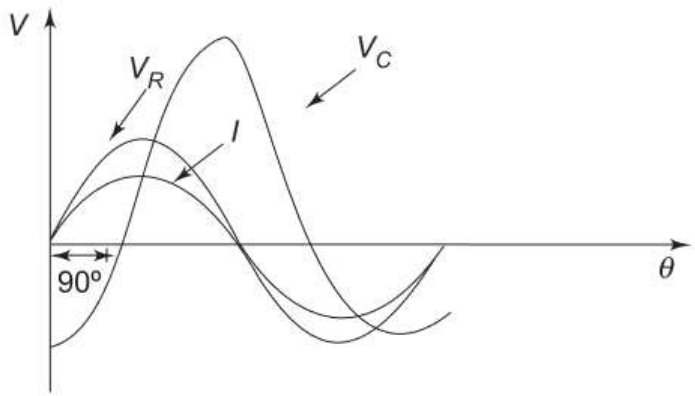

Fig. 5.13 (b)

Here, I leads V_C by 90°. V_R and I are in phase. From Kirchhoff's voltage law, the sum of the voltage drops must be equal to the applied voltage. Therefore, the source voltage is given by

$$V_S = \sqrt{V_R^2 + V_C^2}$$

The phase angle between the resistor voltage and the source voltage is

$$\theta = \tan^{-1} (V_C/V_R)$$

Since the resistor voltage and the current are in phase, θ also represents the phase angle between the source voltage and current. The voltage phasor diagram for the series RC circuit, voltage and current phasor diagrams represented by the waveforms in Fig. 5.13(b) are shown in Fig. 5.13(c).

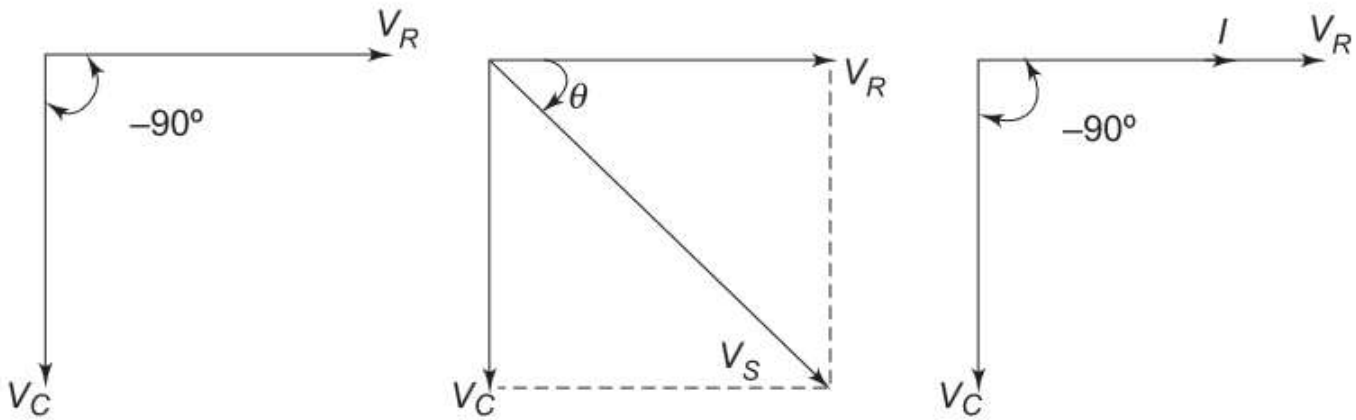

Fig. 5.13(c)

5.3.3 Series R-L-C Circuit

A series RLC circuit is the series combination of resistance, inductance and capacitance. If we observe the impedance diagrams of series RL and series RC circuits as shown in Fig. 5.16(a) and (b), the inductive reactance, X_L, is displayed on the $+j$ axis and the capacitive reactance, X_C, is displayed on the $-j$ axis. These reactance are 180° apart and tend to cancel each other.

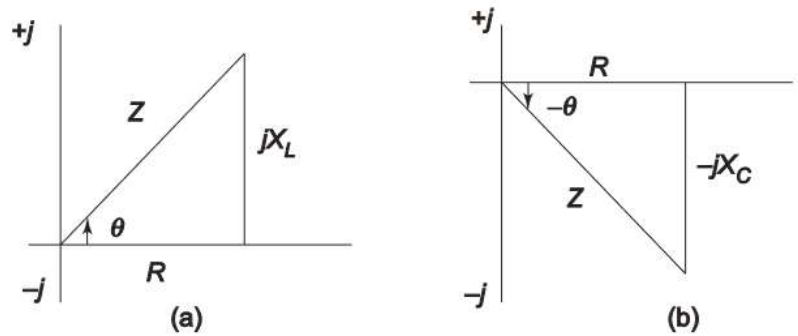

Fig. 5.16

The magnitude and type of reactance in a series RLC circuit is the difference of the two reactance. The impedance for an RLC series circuit is given by $Z = \sqrt{R^2 + (X_L - X_C)^2}$. Similarly, the phase angle for an RLC circuit is

$$\theta = \tan^{-1}\left(\frac{X_L - X_C}{R}\right)$$

Example 5.2 To the circuit shown in Fig. 5.11, consisting a 1 kΩ resistor connected in series with a 50 mH coil, a 10 V rms, 10 kHz signal is applied. Find impedance Z, current I, phase angle θ, voltage across resistance V_R, and the voltage across inductance V_L.

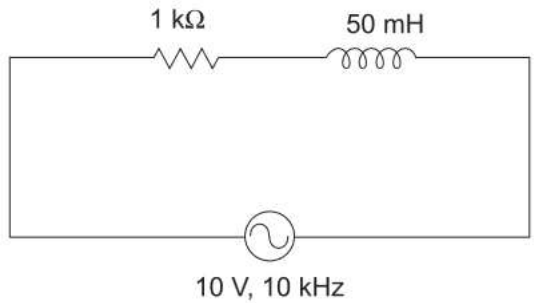

Fig. 5.11

Solution Inductive reactance $X_L = \omega L$

$$= 2\pi fL = (6.28)\,(10^4)\,(50 \times 10^{-3}) = 3140\ \Omega$$

In rectangular form,

Total impedance $Z = (1000 + j3140)\ \Omega$

$$= \sqrt{R^2 + X_L^2}$$

$$= \sqrt{(1000)^2 + (3140)^2} = 3295.4\ \Omega$$

Current $I = V_S/Z = 10/3295.4 = 3.03$ mA

Phase angle $\theta = \tan^{-1}(X_L/R) = \tan^{-1}(3140/1000) = 72.33°$

Therefore, in polar form total impedance $Z = 3295.4\ \angle 72.33°$

Voltage across resistance $V_R = IR$

$$= 3.03 \times 10^{-3} \times 1000 = 3.03\ \text{V}$$

Voltage across inductive reactance $V_L = IX_L$

$$= 3.03 \times 10^{-3} \times 3140 = 9.51\ \text{V}$$

Example 5.4 A sine wave generator supplies a 500 Hz, 10 V rms signal to a 2 kΩ resistor in series with a 0.1 μF capacitor as shown in Fig. 5.14. Determine the total impedance Z, current I, phase angle θ, capacitive voltage V_C, and resistive voltage V_R.

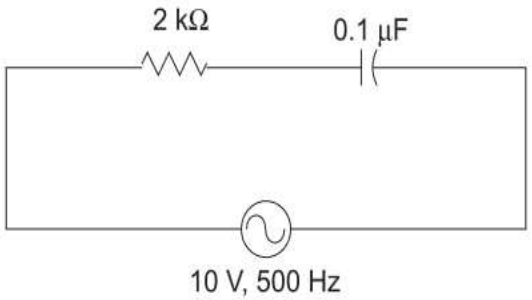

Solution To find the impedance Z, we first solve for X_C

$$X_C = \frac{1}{2\pi fC} = \frac{1}{6.28 \times 500 \times 0.1 \times 10^{-6}}$$

$$= 3184.7\ \Omega$$

In rectangular form,

Total impedance $Z = (2000 - j3184.7)\ \Omega$

$$Z = \sqrt{(2000)^2 + (3184.7)^2}$$

$$= 3760.6\ \Omega$$

Phase angle $\theta = \tan^{-1}(-X_C/R) = \tan^{-1}(-3184.7/2000) = -57.87°$

Current $I = V_S/Z = 10/3760.6 = 2.66$ mA

Capacitive voltage $V_C = IX_C$

$$= 2.66 \times 10^{-3} \times 3184.7 = 8.47\ \text{V}$$

Resistive voltage $V_R = IR$

$$= 2.66 \times 10^{-3} \times 2000 = 5.32 \text{ V}$$

The arithmetic sum of V_C and V_R does not give the applied voltage of 10 volts. In fact, the total applied voltage is a complex quantity. In rectangular form,

Total applied voltage $V_S = 5.32 - j8.47$ V

In polar form

$$V_S = 10 \angle -57.87^\circ \text{ V}$$

The applied voltage is complex, since it has a phase angle relative to the resistive current.

Example 5.6 In the circuit shown in Fig. 5.17, determine the total impedance, current I, phase angle θ, and the voltage across each element.

Solution To find impedance Z, we first solve for X_C and X_L

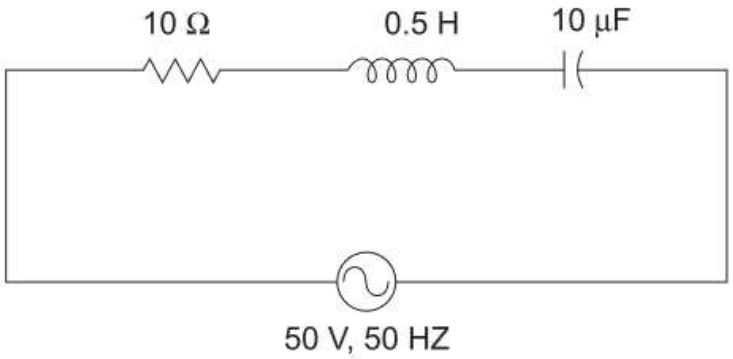

Fig. 5.17

$$X_C = \frac{1}{2\pi f C} = \frac{1}{6.28 \times 50 \times 10 \times 10^{-6}}$$

$$= 318.5\ \Omega$$

$$X_L = 2\pi f L = 6.28 \times 0.5 \times 50 = 157\ \Omega$$

Total impedance in rectangular form

$$Z = (10 + j157 - j318.5)\ \Omega$$

$$= 10 + j(157 - 318.5)\ \Omega = 10 - j161.5\ \Omega$$

Here, the capacitive reactance dominates the inductive reactance.

$$Z = \sqrt{(10)^2 + (161.5)^2}$$

$$= \sqrt{100 + 26082 \cdot 2} = 161.8\ \Omega$$

Current $$I = V_S/Z = \frac{50}{161.8} = 0.3\ \text{A}$$

Phase angle $\theta = \tan^{-1}[(X_L - X_C)/R] = \tan^{-1}(-161.5/10) = -86.45°$

Voltage across the resistor $V_R = IR = 0.3 \times 10 = 3$ V

Voltage across the capacitive reactance $= IX_C = 0.3 \times 318.5 = 95.55$ V

Voltage across the inductive reactance $= IX_L = 0.3 \times 157 = 47.1$ V

Example 10.2

Compute $\mathbf{V}_1$ and $\mathbf{V}_2$ in the circuit of Fig. 10.4.

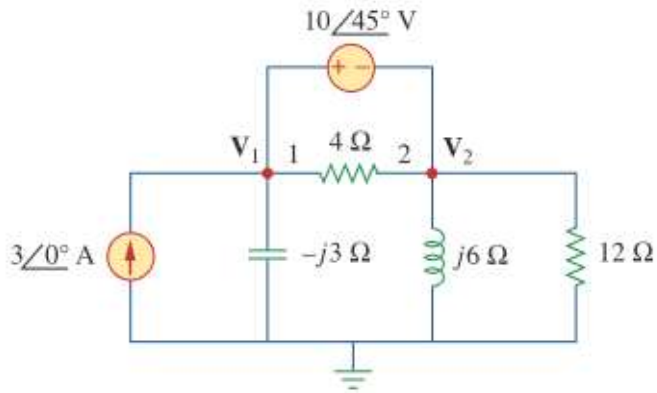

Figure 10.4
For Example 10.2.

Solution:

Nodes 1 and 2 form a supernode as shown in Fig. 10.5. Applying KCL at the supernode gives

$$3 = \frac{\mathbf{V}_1}{-j3} + \frac{\mathbf{V}_2}{j6} + \frac{\mathbf{V}_2}{12}$$

or

$$36 = j4\mathbf{V}_1 + (1 - j2)\mathbf{V}_2 \qquad \textbf{(10.2.1)}$$

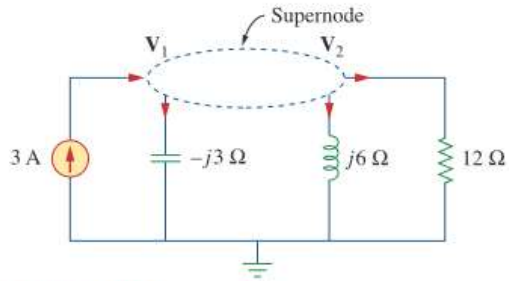

Figure 10.5
A supernode in the circuit of Fig. 10.4.

But a voltage source is connected between nodes 1 and 2, so that

$$\mathbf{V}_1 = \mathbf{V}_2 + 10\underline{/45^\circ} \qquad \textbf{(10.2.2)}$$

Substituting Eq. (10.2.2) in Eq. (10.2.1) results in

$$36 - 40\underline{/135^\circ} = (1 + j2)\mathbf{V}_2 \qquad \Rightarrow \qquad \mathbf{V}_2 = 31.41\underline{/-87.18^\circ}\ \text{V}$$

From Eq. (10.2.2),

$$\mathbf{V}_1 = \mathbf{V}_2 + 10\underline{/45^\circ} = 25.78\underline{/-70.48^\circ}\ \text{V}$$

Determine current $\mathbf{I}_o$ in the circuit of Fig. 10.7 using mesh analysis.

Solution:

Applying KVL to mesh 1, we obtain

$$(8 + j10 - j2)\mathbf{I}_1 - (-j2)\mathbf{I}_2 - j10\mathbf{I}_3 = 0 \qquad \textbf{(10.3.1)}$$

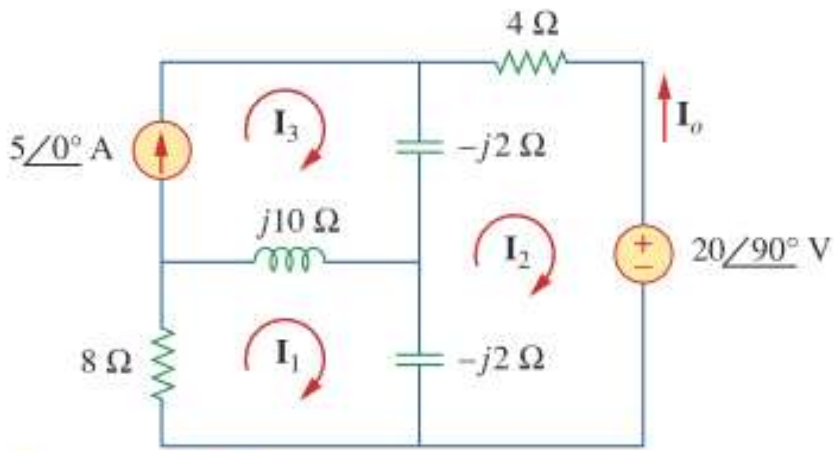

Figure 10.7
For Example 10.3.

For mesh 2,

$$(4 - j2 - j2)\mathbf{I}_2 - (-j2)\mathbf{I}_1 - (-j2)\mathbf{I}_3 + 20\angle 90^\circ = 0 \qquad \textbf{(10.3.2)}$$

For mesh 3, $\mathbf{I}_3 = 5$. Substituting this in Eqs. (10.3.1) and (10.3.2), we get

$$(8 + j8)\mathbf{I}_1 + j2\mathbf{I}_2 = j50 \qquad \textbf{(10.3.3)}$$

$$j2\mathbf{I}_1 + (4 - j4)\mathbf{I}_2 = -j20 - j10 \qquad \textbf{(10.3.4)}$$

Equations (10.3.3) and (10.3.4) can be put in matrix form as

$$\begin{bmatrix} 8 + j8 & j2 \\ j2 & 4 - j4 \end{bmatrix} \begin{bmatrix} \mathbf{I}_1 \\ \mathbf{I}_2 \end{bmatrix} = \begin{bmatrix} j50 \\ -j30 \end{bmatrix}$$

from which we obtain the determinants

$$\Delta = \begin{vmatrix} 8 + j8 & j2 \\ j2 & 4 - j4 \end{vmatrix} = 32(1 + j)(1 - j) + 4 = 68$$

$$\Delta_2 = \begin{vmatrix} 8 + j8 & j50 \\ j2 & -j30 \end{vmatrix} = 340 - j240 = 416.17\angle -35.22^\circ$$

$$\mathbf{I}_2 = \frac{\Delta_2}{\Delta} = \frac{416.17\angle -35.22^\circ}{68} = 6.12\angle -35.22^\circ \text{ A}$$

The desired current is

$$\mathbf{I}_o = -\mathbf{I}_2 = 6.12\angle 144.78^\circ \text{ A}$$

EXAMPLE 4.1

Find the node voltages $\overline{V}_1$ and $\overline{V}_2$ in the circuit shown in Fig. 1.

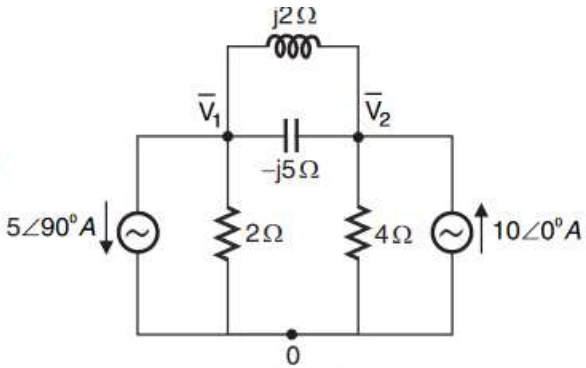

In the circuit of Fig. 1, the reference node is 0. The voltage of the reference node is zero. To find the voltages $\overline{V}_1$ and $\overline{V}_2$ with respect to the reference node, write two KCL equations at these nodes and solve the two equations for a unique solution.

With reference to Fig. 2, at node-1, using KCL we get,

Currents leaving node-1 : $5\angle 90^\circ,\ \dfrac{\overline{V}_1}{2},\ \dfrac{\overline{V}_1 - \overline{V}_2}{j2},\ \dfrac{\overline{V}_1 - \overline{V}_2}{-j5}$

Current entering node-1 : Nil

$$\therefore\ 5\angle 90^\circ + \frac{\overline{V}_1}{2} + \frac{\overline{V}_1 - \overline{V}_2}{j2} + \frac{\overline{V}_1 - \overline{V}_2}{-j5} = 0$$

$$j5 + \frac{\overline{V}_1}{2} + \frac{\overline{V}_1}{j2} - \frac{\overline{V}_2}{j2} - \frac{\overline{V}_1}{j5} + \frac{\overline{V}_2}{j5} = 0$$

$$\therefore \left(\frac{1}{2} + \frac{1}{j2} - \frac{1}{j5}\right)\overline{V}_1 + \left(-\frac{1}{j2} + \frac{1}{j5}\right)\overline{V}_2 = -j5$$

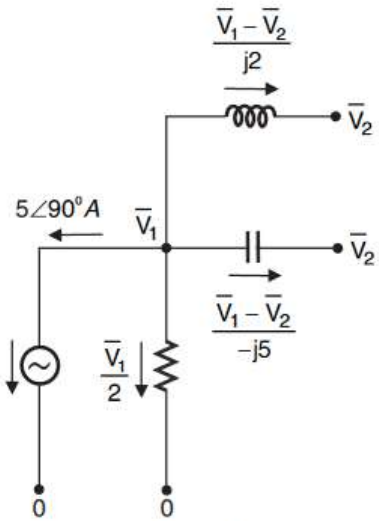

Fig. 2.

With reference to Fig. 3, at node-2, using KCL we get,

Currents leaving node-2 : $\dfrac{\overline{V}_2 - \overline{V}_1}{j2}, \dfrac{\overline{V}_2}{4}, \dfrac{\overline{V}_2 - \overline{V}_1}{-j5}$

Current entering node-2 : $10\angle 0^\circ A$

$$\therefore \frac{\overline{V}_2 - \overline{V}_1}{j2} + \frac{\overline{V}_2}{4} + \frac{\overline{V}_2 - \overline{V}_1}{-j5} = 10\angle 0^\circ$$

$$\frac{\overline{V}_2}{j2} - \frac{\overline{V}_1}{j2} + \frac{\overline{V}_2}{4} - \frac{\overline{V}_2}{j5} + \frac{\overline{V}_1}{j5} = 10$$

$$\left(-\frac{1}{j2} + \frac{1}{j5}\right)\overline{V}_1 + \left(\frac{1}{j2} + \frac{1}{4} - \frac{1}{j5}\right)\overline{V}_2 = 10$$

$$j0.3\,\overline{V}_1 + (0.25 - j0.3)\,\overline{V}_2 = 10$$

$$\therefore (0.25 - j0.3)\,\overline{V}_2 = 10 - j0.3\,\overline{V}_1$$

$$\therefore \overline{V}_2 = \frac{10}{0.25 - j0.3} - \frac{j0.3}{0.25 - j0.3}\overline{V}_1$$

$$= 16.3934 + j19.6721 + (0.5902 - j0.4918)\,\overline{V}_1 \qquad \text{..... (2)}$$

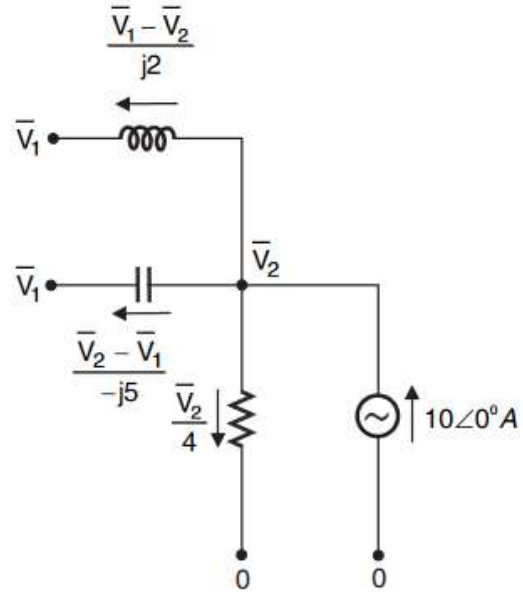

Fig. 3.

In order to solve $\overline{V}_1$, let us substitute for $\overline{V}_2$ from equation (2) in equation (1).

$$\therefore\ (0.5 - j0.3)\overline{V}_1 + j0.3[16.3934 + j19.6721 + (0.5902 - j0.4918)\overline{V}_1] = -j5$$

$$(0.5 - j0.3)\overline{V}_1 - 5.9016 + j4.918 + (0.1475 + j0.1771)\overline{V}_1 = -j5$$

$$(0.5 - j0.3 + 0.1475 + j0.1771)\overline{V}_1 = -j5 + 5.9016 - j4.918$$

$$(0.6475 - j0.1229)\overline{V}_1 = 5.9016 - j9.918$$

$$\therefore\ \overline{V}_1 = \frac{5.9016 - j9.918}{0.6475 - j0.1229} = 11.6037 - j13.1149\,V = 17.5113\angle -48.5^{\circ}\,V$$

From equation (2), we get,

$$\overline{V}_2 = 16.3934 + j19.6721 + (0.5902 - j0.4918)\,\overline{V}_1$$

$$= 16.3934 + j19.6721 + (0.5902 - j0.4918) \times (11.6037 - j13.1149)$$

$$= 16.792 + j6.225\,V$$

$$= 17.9087\angle 20.3^{\circ}\,V$$

EXAMPLE 1.30 *(AU Dec'16, 12 Marks)*

In the circuit shown in Fig. 1, find $\bar{I}_2$ and voltage drop across 1 Ω resistor.

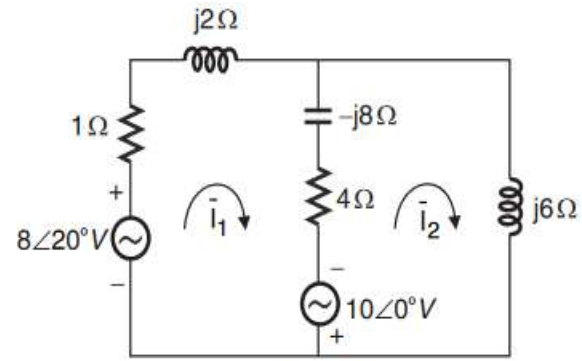

Fig. 1.

SOLUTION

With reference to Fig. 1, the mesh basis matrix equation is formed by inspection.

$$\begin{bmatrix} \bar{Z}_{11} & \bar{Z}_{12} \\ \bar{Z}_{21} & \bar{Z}_{22} \end{bmatrix} \begin{bmatrix} \bar{I}_1 \\ \bar{I}_2 \end{bmatrix} = \begin{bmatrix} \bar{E}_{11} \\ \bar{E}_{22} \end{bmatrix} \quad \text{..... (1)}$$

$\bar{Z}_{11} = 1 + j2 - j8 + 4 = 5 - j6$

$\bar{Z}_{12} = \bar{Z}_{21} = -(-j8 + 4) = -4 + j8$

$\bar{Z}_{22} = 4 - j8 + j6 = 4 - j2$

$\bar{E}_{11} = 8\angle 20^\circ + 10\angle 0^\circ = 7.5175 + j2.7362 + 10$

$= 17.5175 + j2.7362$

$\bar{E}_{22} = -10\angle 0^\circ = -10$

On substituting the above terms in equation (1), we get,

$$\begin{bmatrix} 5 - j6 & -4 + j8 \\ -4 + j8 & 4 - j2 \end{bmatrix} \begin{bmatrix} \bar{I}_1 \\ \bar{I}_2 \end{bmatrix} = \begin{bmatrix} 17.5175 + j2.7362 \\ -10 \end{bmatrix} \quad \text{..... (2)}$$

To solve the unknowns (i.e., mesh currents) of equation (2) by Cramer's rule, we can define three determinants Δ, Δ_1 and Δ_2 as shown below:

$$\Delta = \begin{vmatrix} 5-j6 & -4+j8 \\ -4+j8 & 4-j2 \end{vmatrix} \quad ; \quad \Delta_1 = \begin{vmatrix} 17.5175+j2.7362 & -4+j8 \\ -10 & 4-j2 \end{vmatrix}$$

$$\Delta_2 = \begin{vmatrix} 5-j6 & 17.5175+j2.7362 \\ -4+j8 & -10 \end{vmatrix}$$

The determinants are evaluated by expanding along first row and the mesh currents are solved by Cramer's rule.

$$\Delta = \begin{vmatrix} 5-j6 & -4+j8 \\ -4+j8 & 4-j2 \end{vmatrix} = (5-j6)\times(4-j2)-(-4+j8)^2$$

$$= 56 + j30$$

$$\Delta_1 = \begin{vmatrix} 17.5175+j2.7362 & -4+j8 \\ -10 & 4-j2 \end{vmatrix} = [(17.5175+j2.7362)\times(4-j2)]-[(-10)\times(-4+j8)]$$

$$= 35.5424 + j55.9098$$

$$\Delta_2 = \begin{vmatrix} 5-j6 & 17.5175+j2.7362 \\ -4+j8 & -10 \end{vmatrix} = (5-j6)\times(-10)-(-4+j8)\times(17.5175+j2.7362)$$

$$= 41.9596 - j69.1952$$

$$\bar{I}_1 = \frac{\Delta_1}{\Delta} = \frac{35.5424+j55.9098}{56+j30} = 0.9087+j0.5116 = 1.0428\angle 29.4^{\circ}\ A$$

$$\bar{I}_2 = \frac{\Delta_2}{\Delta} = \frac{41.9596-j69.1952}{56+j30} = 0.0679-j1.272 = 1.2738\angle -86.9^{\circ}\ A$$

Let, $\bar{V}_1$ = Voltage drop across 1Ω resistor.

Now, $\bar{V}_1 = \bar{I}_1 \times 1 = \bar{I}_1 = 1.0428\angle 29.4^{\circ}\ V$

EXAMPLE 4.37

(AU June'14, 8 Marks)

A symmetrical three-phase three wire 440V supply is connected to a star-connected load. The impedance in each branch is $\bar{Z}_R = 2+j3\,\Omega$, $\bar{Z}_Y = 1-j2\,\Omega$ and $\bar{Z}_B = 3+j4\,\Omega$. Find its equivalent delta connected load.

SOLUTION

The standard equations for converting star connected impedances into delta or vice-versa are based on the concept that the power drawn by the impedances in the star or delta connection is the same. Hence, the equivalent delta load can be obtained by using star to delta transformation.

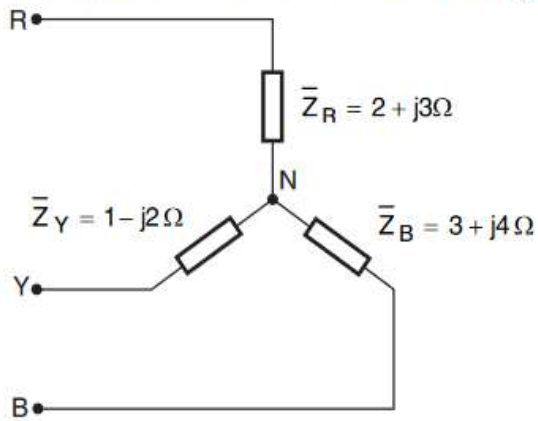

Fig. 1

$\Rightarrow$

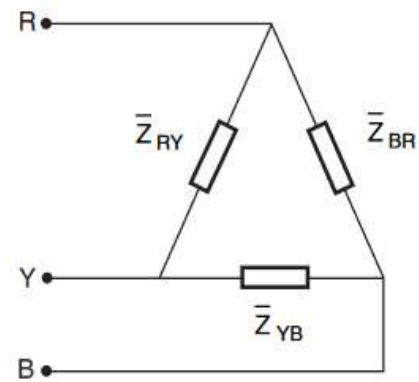

Fig. 2

$$\bar{Z}_{RY} = \bar{Z}_R + \bar{Z}_Y + \frac{\bar{Z}_R \bar{Z}_Y}{\bar{Z}_B} = 2 + j3 + 1 - j2 + \frac{(2+j3)\times(1-j2)}{3+j4}$$

$$= 2 + j3 + 1 - j2 + 0.8 - j1.4$$

$$= 3.8 - j0.4\,\Omega = 3.821\angle -6^0\,\Omega$$

$$\bar{Z}_{YB} = \bar{Z}_Y + \bar{Z}_B + \frac{\bar{Z}_Y \bar{Z}_B}{\bar{Z}_R} = 1 - j2 + 3 + j4 + \frac{(1-j2)\times(3+j4)}{2+j3}$$

$$= 1 - j2 + 3 + j4 + 1.2308 - j\,2.8462$$

$$= 5.2308 - j\,0.8462\,\Omega$$

$$= 5.2988\angle -9.2^0\Omega$$

$$\bar{Z}_{BR} = \bar{Z}_B + \bar{Z}_R + \frac{\bar{Z}_B \bar{Z}_R}{\bar{Z}_Y} = 3 + j4 + 2 + j3 + \frac{(3+j4)\times(2+j3)}{1-j2}$$

$$= 3 + j4 + 2 + j3 - 8 + j$$

$$= -3 + j\,8\,\Omega = 8.544\angle 110.6^0\Omega$$

The equivalent delta connected load impedances are,

$$\bar{Z}_{RY} = 3.8 - j\,0.4\,\Omega; \quad \bar{Z}_{YB} = 5.2308 - j\,0.8462\,\Omega; \quad \bar{Z}_{BR} = -3 + j\,8\,\Omega$$

EXAMPLE 4.36 *(AU June'14, 8 Marks)*

A symmetrical three-phase, three wire, 400 *V* supply is connected to a delta-connected load. Impedance in each branch are $\bar{Z}_{RY} = 10\angle 30^0\ \Omega$, $\bar{Z}_{YB} = 10\angle 45^0\ \Omega$ and $\bar{Z}_{BR} = 2.5\angle 60^0\ \Omega$. Find its equivalent star-connected load.

SOLUTION

The equivalent star load can be obtained by using delta to star transformation as shown below :

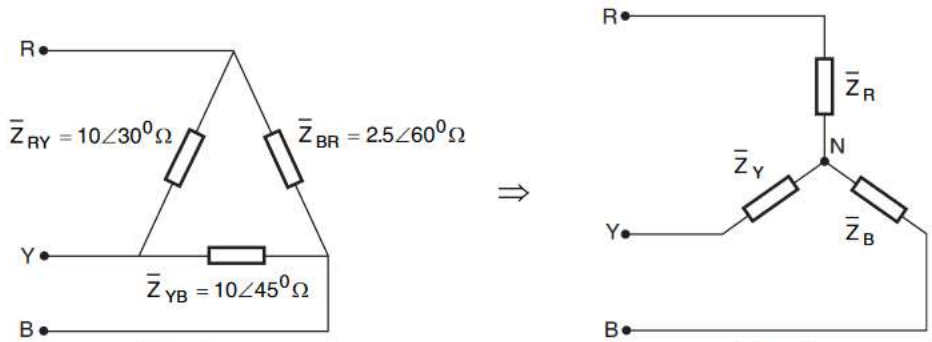

Fig. 1 *Fig. 2*

$$\bar{Z}_R = \frac{\bar{Z}_{RY} \times \bar{Z}_{BR}}{\bar{Z}_{RY} + \bar{Z}_{YB} + \bar{Z}_{BR}} = \frac{10\angle 30^o \times 2.5\angle 60^o}{10\angle 30^o + 10\angle 45^o + 2.5\angle 60^o} = 0.7248 + j0.8646\ \Omega$$

$$= 1.1282\angle 50^o\ \Omega$$

$$\bar{Z}_Y = \frac{\bar{Z}_{YB} \times \bar{Z}_{RY}}{\bar{Z}_{RY} + \bar{Z}_{YB} + \bar{Z}_{BR}} = \frac{10\angle 45^o \times 10\angle 30^o}{10\angle 30^o + 10\angle 45^o + 2.5\angle 60^o} = 3.6955 + j2.5901\ \Omega$$

$$= 4.5128\angle 35^o\ \Omega$$

$$\bar{Z}_B = \frac{\bar{Z}_{BR} \times \bar{Z}_{YB}}{\bar{Z}_{RY} + \bar{Z}_{YB} + \bar{Z}_{BR}} = \frac{2.5\angle 60^o \times 10\angle 45^o}{10\angle 30^o + 10\angle 45^o + 2.5\angle 60^o} = 0.4763 + j1.0227\ \Omega$$

$$= 1.1282\angle 65^o\ \Omega$$